COMMERCIAL DOCUMENTATION

SANDWICH PANEL ANCHOR SYSTEM | TMA
SUPPORTING MANCHET ANCHOR

Copyright Terwa Construction Group 2005 – 2021 © | www.terwa.com

SUPPORTING MANCHET ANCHOR "TMA"

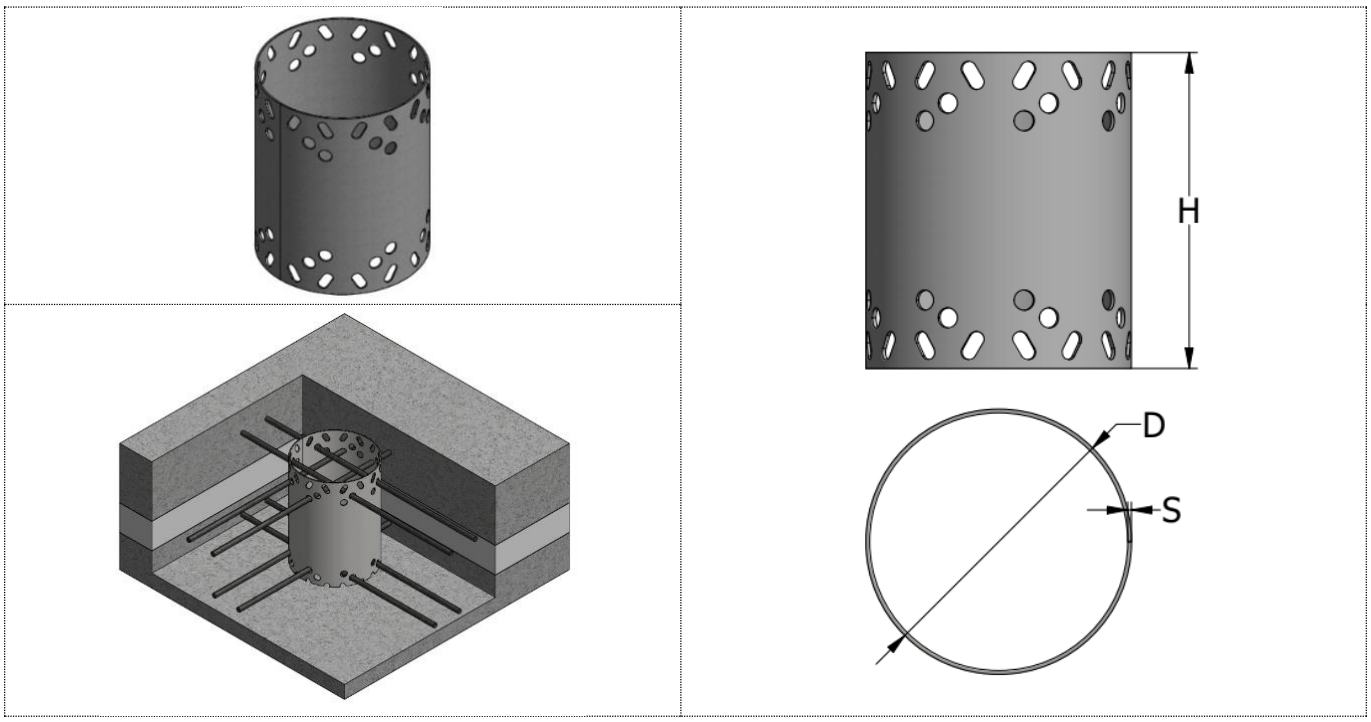

The bearing manchet anchor TMA is a cylindrical sleeve made of stainless steel plate, material W1.4571 (A4-quality) - AISI 316Ti. That anchor can be used as a single bearing element combined with supporting anchors. Both ends of the anchors have two rows of round holes and one row of oval holes. Reinforcement bars are inserted in the round holes and the oval holes are for bonding with the concrete. The plate thickness (mm x 10), the height and the diameter of the anchor are marked on the surface of the anchor for identification. TMA-XX-YYY-ZZZ, XX-plate thickness (mmx10), YYY-height (mm), ZZZ-manchet diameter (mm). E.g.: TMA-10-125-051 for article no. 44139 – table 1.

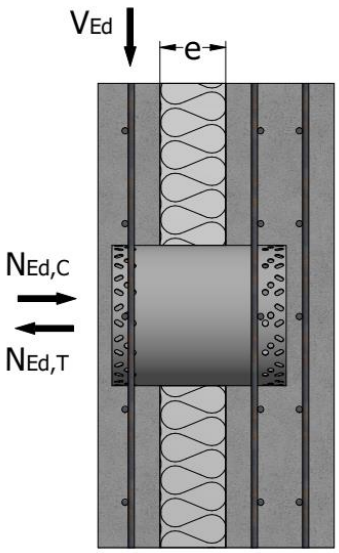

The load on the TMA anchors depends on the dead weight of the façade layer, wind load and the warping caused by the temperature.

Design value of the actions:
$N_{Ed,C}$ – Design value of the compressive load
$N_{Ed,T}$ – Design value of the tensile load
V_{Ed} – Design value of the acting shear load

The allowable load-bearing capacity depends on anchor type, insulation layer thickness (e) and actual horizontal loads.

TMA anchor installation

Concrete quality:	**Reinforcement:**	**Minimum reinforcement for the façade layer**
Façade layer ≥ C30/37	Reinforcing mesh B500B	Square reinforcement mesh >1.88 cm²/m
Load bearing layer ≥ C30/37	Rebar reinforcement B500B	Two layers if the load bearing layer thickness is greater than 100 mm

Copyright Terwa Construction Group 2005 – 2021 © | www.terwa.com

Table 1

Height H mm	Diameter D mm	Spacing number N	Thickness 1 mm		Thickness 1.5 mm		Thickness 2 mm	
			Symbol	Product no.	Symbol	Product no.	Symbol	Product no.
125	51	4	TMA-10-125-051	**44139**	TMA-15-125-051	**43923**	TMA-20-125-051	**44145**
	76	6	TMA-10-125-076	**44140**	TMA-15-125-076	**43924**	TMA-20-125-076	**44146**
	102	8	TMA-10-125-102	**44141**	TMA-15-125-102	**43925**	TMA-20-125-102	**44147**
	127	10	TMA-10-125-127	**44142**	TMA-15-125-127	**43926**	TMA-20-125-127	**44148**
	153	12	TMA-10-125-153	**44143**	TMA-15-125-153	**43927**	TMA-20-125-153	**44149**
	178	14	TMA-10-125-178	**44144**	TMA-15-125-178	**43928**	TMA-20-125-178	**44150**
	204	16			TMA-15-125-204	**61448**		
	229	18			TMA-15-125-229	**61449**		
	255	20			TMA-15-125-255	**61450**		
	280	22			TMA-15-125-280	**61451**		
133	102	8	TMA-10-133-102	**44151**	TMA-15-133-102	**44152**	TMA-20-133-102	**44153**
150	51	4	TMA-10-150-051	**44067**	TMA-15-150-051	**43409**	TMA-20-150-051	**44073**
	76	6	TMA-10-150-076	**44068**	TMA-15-150-076	**43410**	TMA-20-150-076	**44074**
	102	8	TMA-10-150-102	**44069**	TMA-15-150-102	**43411**	TMA-20-150-102	**44075**
	127	10	TMA-10-150-127	**44070**	TMA-15-150-127	**43412**	TMA-20-150-127	**44076**
	153	12	TMA-10-150-153	**44071**	TMA-15-150-153	**43413**	TMA-20-150-153	**44077**
	178	14	TMA-10-150-178	**44072**	TMA-15-150-178	**43414**	TMA-20-150-178	**44078**
	204	16			TMA-15-150-204	**60992**		
	229	18	TMA-10-150-229	**44990**	TMA-15-150-229	**60993**		
175	51	4	TMA-10-175-051	**44154**	TMA-15-175-051	**43415**	TMA-20-175-051	**44164**
	76	6	TMA-10-175-076	**44155**	TMA-15-175-076	**43416**	TMA-20-175-076	**44165**
	102	8	TMA-10-175-102	**44156**	TMA-15-175-102	**43417**	TMA-20-175-102	**44166**
	127	10	TMA-10-175-127	**44157**	TMA-15-175-127	**43418**	TMA-20-175-127	**44167**
	153	12	TMA-10-175-153	**44158**	TMA-15-175-153	**43419**	TMA-20-175-153	**44168**
	178	14	TMA-10-175-178	**44159**	TMA-15-175-178	**43420**	TMA-20-175-178	**44169**
	204	16	TMA-10-175-204	**44160**	TMA-15-175-204	**43421**	TMA-20-175-204	**44170**
	229	18	TMA-10-175-229	**44161**	TMA-15-175-229	**43422**	TMA-20-175-229	**44171**
	255	20	TMA-10-175-255	**44162**	TMA-15-175-255	**43423**	TMA-20-175-255	**44172**
	280	22	TMA-10-175-280	**44163**	TMA-15-175-280	**43424**	TMA-20-175-280	**44173**
200	51	4	TMA-10-200-051	**44079**	TMA-15-200-051	**43425**	TMA-20-200-051	**44089**
	76	6	TMA-10-200-076	**44080**	TMA-15-200-076	**43426**	TMA-20-200-076	**44090**
	102	8	TMA-10-200-102	**44081**	TMA-15-200-102	**43427**	TMA-20-200-102	**44091**
	127	10	TMA-10-200-127	**44082**	TMA-15-200-127	**43428**	TMA-20-200-127	**44092**
	153	12	TMA-10-200-153	**44083**	TMA-15-200-153	**43429**	TMA-20-200-153	**44093**
	178	14	TMA-10-200-178	**44084**	TMA-15-200-178	**43430**	TMA-20-200-178	**44094**
	204	16	TMA-10-200-204	**44085**	TMA-15-200-204	**43431**	TMA-20-200-204	**44095**
	229	18	TMA-10-200-229	**44086**	TMA-15-200-229	**43432**	TMA-20-200-229	**44096**
	255	20	TMA-10-200-255	**44087**	TMA-15-200-255	**43433**	TMA-20-200-255	**44097**
	280	22	TMA-10-200-280	**44088**	TMA-15-200-280	**43434**	TMA-20-200-280	**44098**
225	51	4	TMA-10-225-051	**44099**	TMA-15-225-051	**43435**	TMA-20-225-051	**44109**
	76	6	TMA-10-225-076	**44100**	TMA-15-225-076	**43436**	TMA-20-225-076	**44110**
	102	8	TMA-10-225-102	**44101**	TMA-15-225-102	**43437**	TMA-20-225-102	**44111**
	127	10	TMA-10-225-127	**44102**	TMA-15-225-127	**43438**	TMA-20-225-127	**44112**
	153	12	TMA-10-225-153	**44103**	TMA-15-225-153	**43439**	TMA-20-225-153	**44113**
	178	14	TMA-10-225-178	**44104**	TMA-15-225-178	**43440**	TMA-20-225-178	**44114**
	204	16	TMA-10-225-204	**44105**	TMA-15-225-204	**43441**	TMA-20-225-204	**44115**
	229	18	TMA-10-225-229	**44106**	TMA-15-225-229	**43442**	TMA-20-225-229	**44116**
	255	20	TMA-10-225-255	**44107**	TMA-15-225-255	**43443**	TMA-20-225-255	**44117**
	280	22	TMA-10-225-280	**44108**	TMA-15-225-280	**43444**	TMA-20-225-280	**44118**
240	127	10	TMA-10-240-127	**60266**				

Copyright Terwa Construction Group 2005 – 2021 © | www.terwa.com

Height H mm	Diameter D mm	Spacing number N	Thickness 1 mm		Thickness 1.5 mm		Thickness 2 mm	
			Symbol	Product no.	Symbol	Product no.	Symbol	Product no.
260	51	4	TMA-10-260-051	**44119**	TMA-15-260-051	**43445**	TMA-20-260-051	**44129**
	76	6	TMA-10-260-076	**44120**	TMA-15-260-076	**43446**	TMA-20-260-076	**44130**
	102	8	TMA-10-260-102	**44121**	TMA-15-260-102	**43447**	TMA-20-260-102	**44131**
	127	10	TMA-10-260-127	**44122**	TMA-15-260-127	**43448**	TMA-20-260-127	**44132**
	153	12	TMA-10-260-153	**44123**	TMA-15-260-153	**43449**	TMA-20-260-153	**44133**
	178	14	TMA-10-260-178	**44124**	TMA-15-260-178	**43450**	TMA-20-260-178	**44134**
	204	16	TMA-10-260-204	**44125**	TMA-15-260-204	**43451**	TMA-20-260-204	**44135**
	229	18	TMA-10-260-229	**44126**	TMA-15-260-229	**43452**	TMA-20-260-229	**44136**
	240	19			TMA-15-260-240	**64473**		
	255	20	TMA-10-260-255	**44127**	TMA-15-260-255	**43453**	TMA-20-260-255	**44137**
	280	22	TMA-10-260-280	**44128**	TMA-15-260-280	**43454**	TMA-20-260-280	**44138**
	320	25					TMA-20-260-320	**49091**
	360	28			TMA-15-260-360	**46700**		
280	51	4	TMA-10-280-051	**60723**				
	153	12	TMA-10-280-153	**49247**	TMA-15-280-153	**63567**		
300	51	4			TMA-15-300-051	**49482**		
	76	6			TMA-15-300-076	**49483**		
	102	8			TMA-15-300-102	**49484**		
	127	10			TMA-15-300-127	**49485**		
	153	12			TMA-15-300-153	**49486**		
	178	14			TMA-15-300-178	**49487**		
	204	16			TMA-15-300-204	**49488**		
	229	18			TMA-15-300-229	**49089**		
	255	20			TMA-15-300-255	**49090**		
	280	22			TMA-15-300-280	**49489**		
325	51	4			TMA-15-325-051	**60783**		
	178	14			TMA-15-325-178	**60784**		
	280	22			TMA-15-325-280	**60785**		
340	51	4			TMA-15-340-051	**61452**		
	102	8			TMA-15-340-102	**61453**		
	127	10			TMA-15-340-127	**61454**		
	153	12			TMA-15-340-153	**61455**		
	178	14			TMA-15-340-178	**61456**		
	204	16			TMA-15-340-204	**61457**		
	229	18			TMA-15-340-229	**61458**		
	255	20			TMA-15-340-255	**61459**		
	280	20			TMA-15-340-280	**61460**		
370	204	16	TMA-10-370-204	**65817**				

Copyright Terwa Construction Group 2005 – 2021 © | www.terwa.com

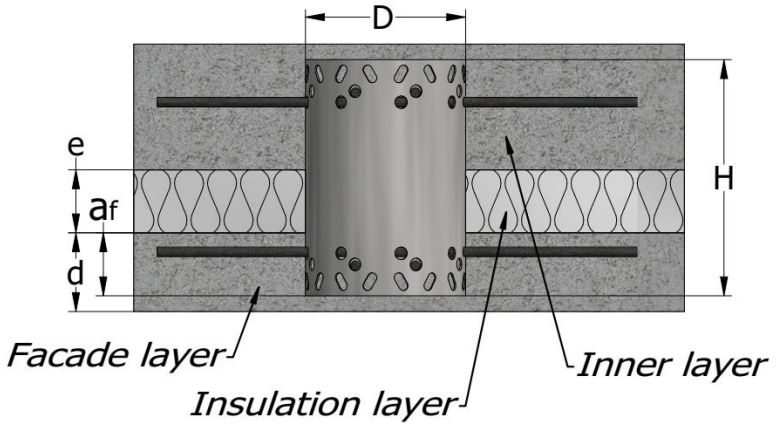

ANCHOR HEIGHT

The anchor height (**H**) depends on the façade layer thickness (d) and on the insulation layer thickness (**e**) – Table 2.

$$\boldsymbol{H \geq 2 \cdot a_f + e}$$

Table 2

d [mm] \ e [mm]	30	40	50	60	70	80	90	100	110	120	130	140	150
60	H = 150							H = 225					
70													
80		H = 175		H = 200			H = 225	H = 260			H = 300		
90													
100													
120													

EMBEDDED DEPTH OF ANCHOR

The embedded depth ($\boldsymbol{a_f}$) of the manchet anchor depends on the façade layer thickness (d) and on the insulation layer thickness (**e**) – Table 3.

Table 3

d [mm] \ e [mm]	30	40	50	60	70	80	90	100	110	120	130	140	150
60	50							55					
70	55							62					
80	60							70					
90	60							70					
100	60							70					
120	60							70					

ANCHORING IN CONCRETE

The reinforcement bars used for anchoring the manchet anchor are inserted in the round holes of both ends of the anchor, paired in every row, and positioned in the perpendicular direction (for large diameter). The anchoring bars are installed in the façade layer and in the load bearing layer. The number and the length of the anchoring bars depend on the manchet anchor diameter, indicated in following table.

Copyright Terwa Construction Group 2005 – 2021 © | www.terwa.com

Table 4

Manchet anchor TMA	Diameter mm	Symbol	Anchoring bars B500B
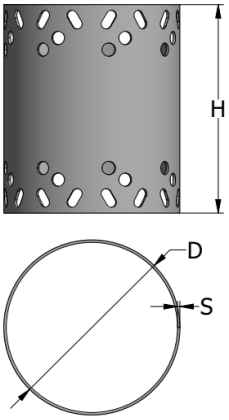			2 x 2 bars with diameter 6 mm L = 500 mm
	51		
	76		
	102		
	127		2 x 4 bars with diameter 6 mm L = 700 mm
	153		
	178		
	204		
	229		
	255		
	280		

DIAMETER OF THE MANCHET ANCHOR – TMA

After establishing the height of the manchet anchor, the manchet anchor diameter is determined depending on the load (Q) of the manchet anchor, the façade layer thickness and the insulated layer thickness – tables: 5, 6, 7, 8 and 9.

The permitted load Q_{adm} (kN) on the anchor for a three-layer sandwich panel, façade layer thickness d ≤ 80 mm (N=4.2kN)

Table 5

D mm \ e mm	30	40	50	60	70	80	90	100	110	120	130	140	150
51	10.8	10.8	10.8	10.8	10.0	8.6	7.4	6.2	5.2	4.4	3.7	3.0	2.4
76	16.2	16.2	16.2	16.2	14.4	12.8	11.1	9.7	8.7	8.2	7.6	7.0	6.0
102	21.5	21.5	21.5	21.0	19.0	17.0	15.0	13.5	12.5	11.8	11.2	10.7	10.3
127	27.0	27.0	27.0	25.5	23.5	21.0	19.0	16.9	15.7	14.7	13.8	13.1	12.5
153	32.5	32.5	32.5	30.5	28.0	25.5	23.0	20.1	18.9	17.8	16.5	15.5	14.5
178	38.0	38.0	37.5	35.0	32.0	29.5	26.5	23.1	21.7	20.5	19.4	18.4	17.5
204	43.0	43.0	42.5	39.5	36.5	33.5	30.5	26.3	24.7	23.3	22.0	20.8	19.8
229	48.5	48.5	47.5	44.0	41.0	37.5	34.0	29.2	27.5	25.9	24.5	23.3	22.2
255	54.0	54.0	52.0	49.0	44.0	40.0	38.0	32.4	30.4	28.7	27.1	25.7	24.5
280	59.0	59.0	57.0	52.0	46.0	41.0	38.0	35.3	33.2	31.3	29.6	28.0	26.7

The permitted load Q_{adm} (kN) on the anchor for a three-layer sandwich panel, façade layer thickness d = 90 mm (N=5.8kN)

Table 6

D mm \ e mm	30	40	50	60	70	80	90	100	110	120	130	140	150
51	10.8	10.8	10.0	9.0	8.0	7.0	6.0	5.0	4.8	4.0	3.5	2.8	2.1
76	16.2	16.2	15.0	14.0	12.8	11.5	10.0	7.8	7.3	6.9	6.5	6.1	5.7
102	21.5	21.5	21.0	19.5	17.5	16.5	14.2	11.0	10.3	9.6	9.2	8.7	8.4
127	27.0	27.0	26.5	24.0	22.0	20.2	17.9	14.0	13.2	12.5	11.8	11.2	10.6
153	32.5	32.5	31.5	29.0	26.5	24.5	22.1	17.2	16.2	15.1	14.5	13.7	13.0
178	38.0	38.0	37.0	33.0	32.0	28.5	26.0	20.2	19.0	18.0	17.0	16.1	15.5
204	43.0	43.0	42.0	38.0	35.0	32.5	29.5	23.7	22.1	20.9	19.8	18.7	17.8
229	48.5	48.6	47.0	43.0	40.0	37.0	33.0	26.8	25.0	23.6	22.4	21.2	20.1
255	54.0	54.0	52.0	48.0	43.0	40.0	37.0	29.8	28.0	26.5	25.0	23.7	22.8
280	59.0	59.0	57.0	51.0	45.0	41.0	37.0	32.8	30.8	29.0	27.5	25.9	24.9

The permitted load Q_{adm} (kN) on the anchor for a three-layer sandwich panel, façade layer thickness d = 100 mm (N=6.8kN)

Copyright Terwa Construction Group 2005 – 2021 © | www.terwa.com

Table 7

D mm \ e mm	30	40	50	60	70	80	90	100	110	120	130	140	150
51	6.0	6.6	5.4	4.8	4.2	4.0	3.6						
76	15.2	14.3	13.9	11.3	10.8	9.6	8.1	4.1	4.0	4.0	3.8	3.4	3.1
102	21.5	21.0	19.0	17.2	15.9	14.3	13.0	8.0	7.4	7.0	6.7	6.3	6.0
127	27.0	26.5	24.7	22.6	20.8	18.8	16.8	14.5	10.5	10.0	9.4	8.9	8.5
153	32.5	32.4	30.0	27.8	25.5	23.2	21.0	17.8	13.6	13.0	12.2	11.6	11.1
178	38.0	37.9	35.1	32.1	30.0	27.5	24.7	21.1	16.5	15.9	14.9	14.1	13.5
204	43.0	42.9	40.3	37.5	34.3	32.0	28.0	24.3	19.8	18.7	17.6	16.7	15.9
229	48.5	48.4	45.3	42.5	39.3	36.3	32.2	27.6	22.6	21.5	20.3	19.3	18.2
255	54.0	54.0	50.4	47.0	42.6	39.5	36.5	30.4	25.7	24.6	23.1	21.8	20.8
280	59.0	58.9	55.3	50.8	45.0	40.2	36.5	35.1	28.5	27.2	25.5	24.2	23.1

The permitted load Q_{adm} (kN) on the anchor for a three-layer sandwich panel, façade layer thickness d = 110 mm and 120 mm (N=9.3kN)

Table 8

D mm \ e mm	30	40	50	60	70	80	90	100	110	120	130	140	150
51													
76													
102	15.0	14.5	13.0	11.5	10.5	9.8	8.6						
127	23.0	21.5	20.0	18.5	16.5	15.5	13.5						
153	30.0	28.0	26.0	24.0	22.0	20.5	18.5						
178	36.0	33.0	32.0	28.0	27.0	24.0	22.0	3.0	2.7	2.5	2.5	2.3	2.0
204	42.5	39.0	37.0	34.0	32.0	28.5	26.5	10.0	9.2	8.6	8.0	7.9	7.8
229	48.0	45.0	42.0	39.0	37.0	33.0	30.0	14.0	13.6	12.6	12.0	11.5	11.1
255	54.0	50.2	48.0	43.0	42.0	38.0	34.0	18.4	17.4	16.3	15.3	14.6	14.2
280	59.0	56.2	52.5	48.0	43.0	39.0	34.0	22.0	21.0	19.7	18.6	17.5	17.0

The permitted load Q_{adm} (kN) on the anchor for a four-layer sandwich panel, façade layer thickness d ≤ 80 mm

Table 9

D mm \ e mm	30	40	50	60	70	80	90	100	110	120	130	140	150
51	No air cavity possible			6.3	5.6	4.9	4.2	No tests executed					
76				12.6	11.2	10.0	8.7						
102				18.0	16.5	14.5	13.0						
127				23.0	21.0	19.0	17.0						
153				28.0	26.0	23.5	21.2						
178				33.0	30.5	28.0	25.0						
204				38.0	35.0	32.0	29.0						
229				42.5	39.5	36.0	33.0						
255				47.0	43.0	39.0	37.0						
280				50.0	45.0	40.0	37.0						

Copyright Terwa Construction Group 2005 – 2021 © | www.terwa.com

CONTACT

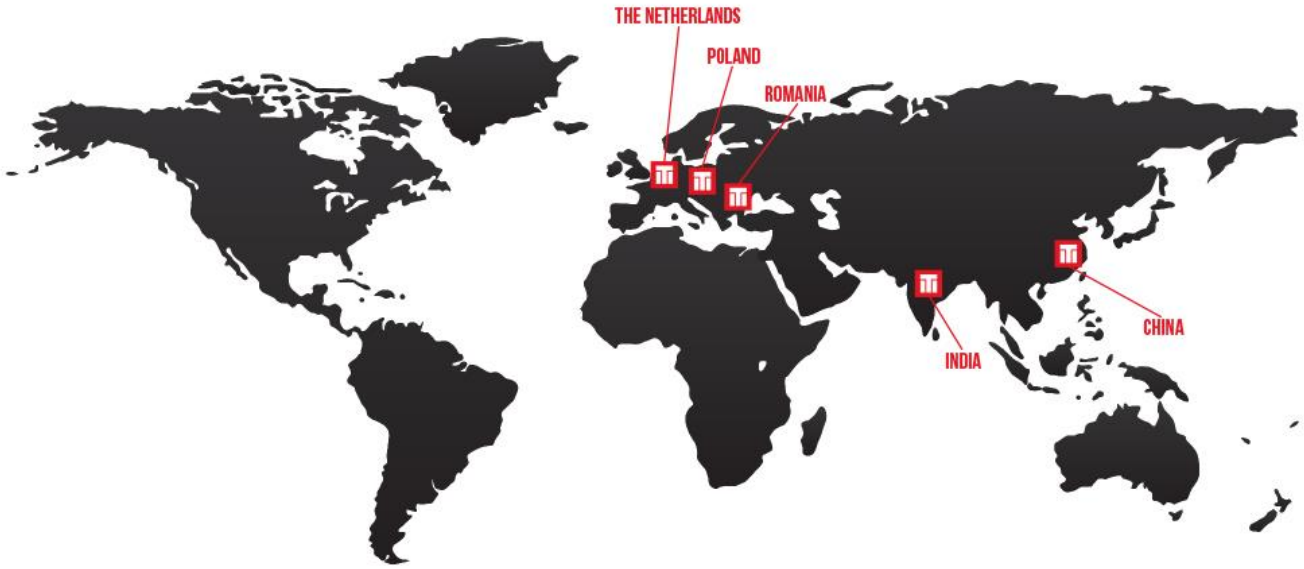

TERWA is the global supplier for precast and construction solutions with multiple offices around the world. With all our staff, partners and agents, we are happy to provide all construction and precast companies who work in the building industry with full service and 100% support.

TERWA CONSTRUCTION GROUP

Terwa Construction Netherlands (HQ)
Global Sales & Distribution
Kamerlingh Onneslaan 1-3
3401 MZ IJsselstein
The Netherlands
T +31-(0)30 699 13 29
F +31-(0)30 220 10 77
E info@terwa.com

Terwa Construction Central East Europe
Sales & Distribution
Strada Sânzienei
507075 Ghimbav
Romania
T +40 372 611 576
E info@terwa.com

Terwa Construction Poland
Sales & Distribution
Ul. Cicha 5 lok. 4
00-353 Warszawa
Poland
E info@terwa.com

Terwa Construction India & Middle East
Sales & Distribution
India
T +91 89 687 000 41
E info@terwa.com

Terwa Construction China
Sales & distribution
5F 504, No. 101 Chuanchang road
PRC, 200032, Shanghai
China
E info@terwa.com

ALL SPECIFICATIONS CAN BE CHANGED WITHOUT PREVIOUS NOTICE.

DISCLAIMER

Terwa B.V. is not liable for deviations due to wear of the products it has delivered. Neither is Terwa B.V. liable for damage due to inaccurate and/or improper handling and use of the products it has delivered and/or use of same for purposes other than those intended.
Terwa B.V.'s responsibility is furthermore limited in accordance with article 13 of the "Metaalunie" conditions, which are applicable for all Terwa B.V. deliveries. The user is responsible for ensuring compliance with all applicable copyright laws. Without limiting the rights under copyright, no part of this documentation may be reproduced, stored in or introduced into a retrieval system, or transmitted in any form or by any means (electronic, mechanical, photocopying, recording, or otherwise), or for any purpose, without the express written permission of Terwa B.V.

Copyright Terwa Construction Group 2005 – 2021 © | www.terwa.com